56" CAB TO AXLE SINGLE REAR WHEEL

600 SERIES BOTH SIDES

KES416J

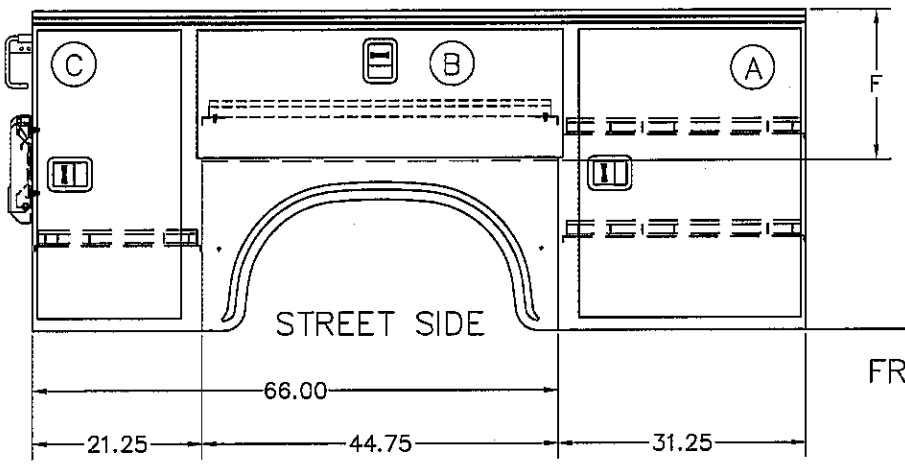

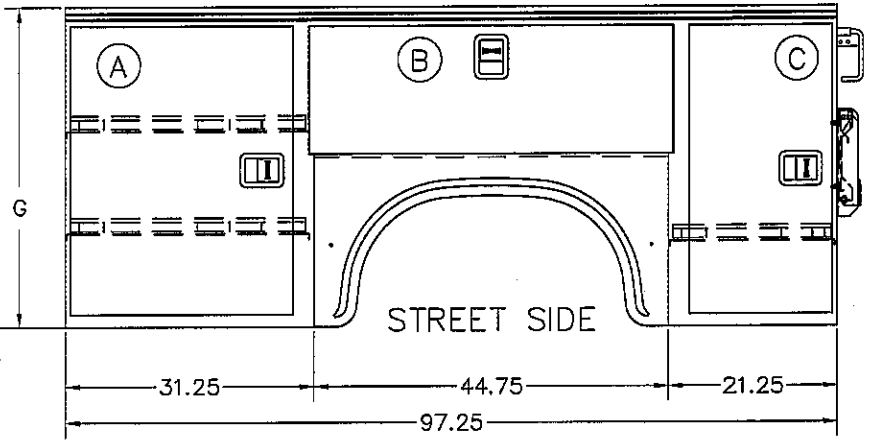

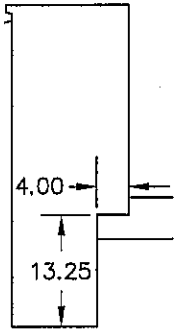

FRONT VERTICAL CUTOUT ALL 96" MODELS

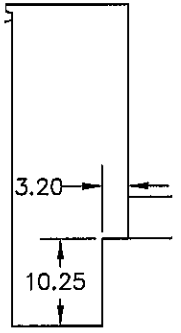

REAR VERTICAL CUTOUT ALL 96" MODELS

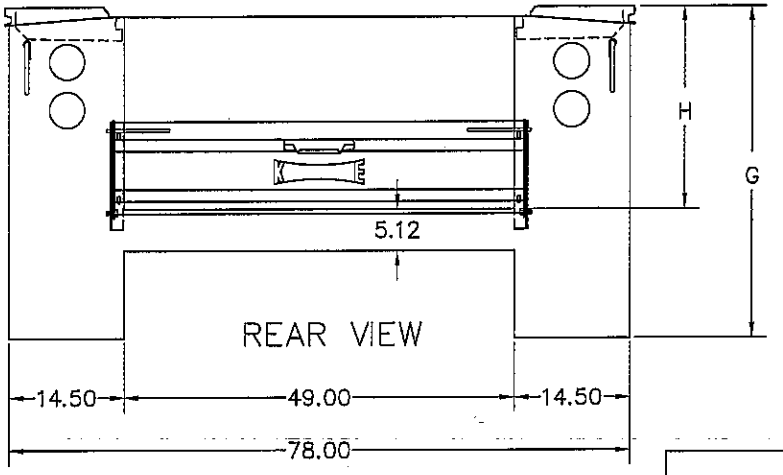

RECOMMENDED CA 56"

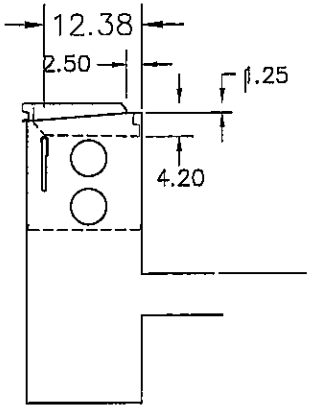

"F" MODELS ONLY

MODEL	F	G	H
696FJ40	19.75	41.25	25.25

CLEAR DOOR OPENING

	A	B	C
WIDTH	25.50	43.50	15.50
HEIGHT (STD)	33.50	13.50	33.50

REVISIONS			
NO.	CHANGE	BY	DATE
	REV 1	MM	11/98
	REV 2	JR	7/02

UNLESS OTHERWISE SPECIFIED, THE FOLLOWING TOLERANCES APPLY
.X ± .12
.XX ± .06
.XXX ± .03
ANGLES ± 2°

PROPERTY OF THE KNAPHEIDE MFG. CO., QUINCY, IL AND IS LOANED TO THE RECIPIENT SUBJECT TO RETURN UPON DEMAND. ITS CONTENTS ARE CONFIDENTIAL AND MUST NOT BE COPIED OR SUBMITTED TO OUTSIDE PARTIES FOR USE OR EXAMINATION.

THE KNAPHEIDE MFG CO
QUINCY, ILLINOIS

TITLE: 696FJ40 SERIES SERVICE BODY W/ ML-HLH

DRAWN BY & DATE: JAA 6/19/98
MATERIAL:
CHECKED BY & DATE:
SCALE: 1=28
EST. WT. LBS.
SHT 1 OF 1
DRAWING NO. KES416J